3-way ball valve flanged end

short name: 3WFK*

PN 16, full bore

anti-static-design

für direkten Antriebsaufbau

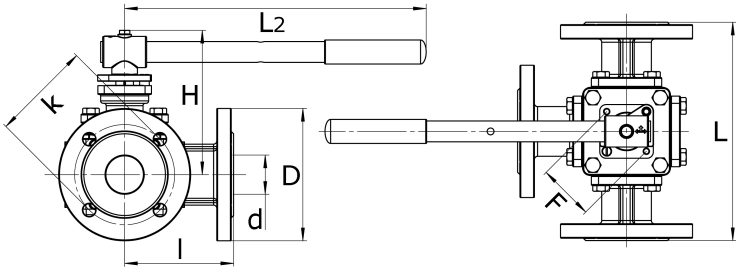

technical product sheet

Kugel	DN	Zoll	L	W	H	h3	h1	d	k	kg
L-Bohr.	32	1 1/4"	193	403	171	106	19	32	100	15,100
L-Bohr.	40	1 1/2"	234	403	171	106	19	40	110	14,440
L-Bohr.	50	2"	273	403	176	111	19	50	125	20,030
L-Bohr.	65	2 1/2"	297	504	208	119	24	65	145	28,260
L-Bohr.	80	3"	305	504	216	137	24	76	160	36,040
L-Bohr.	100	4"	369	654	236	157	24	96	180	60,180
T-Bohr.	32	1 1/4"	193	403	171	106	19	32	100	14,400
T-Bohr.	40	1 1/2"	215	403	171	106	19	40	110	14,276
T-Bohr.	50	2"	273	403	176	111	19	50	125	19,870
T-Bohr.	65	2 1/2"	297	504	208	119	24	65	145	27,780
T-Bohr.	80	3"	305	504	216	137	24	76	160	35,800
T-Bohr.	100	4"	369	654	236	157	24	96	180	59,000
T-Bohr.	150	6"	480	800	329	227	38	148	240	105,000

available material: V4A

Industrial valves › ball valves › flanged ends › 3-way

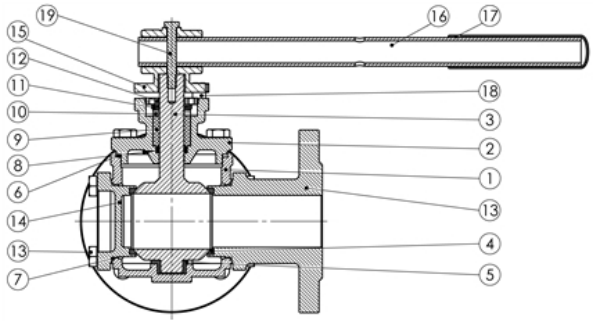

PARTS LIST

No.	Designation	Material
1.	Housing	V4A
2.	Housing cover	V4A
3.	Ball with control shaft	V4A
4.	Seat seal (4x)	PTFE
5.	Ball centering	PTFE
6.	Housing seal	PTFE
7.	Flange seal (4x)	PTFE
8.	O-Ring (2x)	Viton
9.	Stem packing	PTFE
10.	Trust washer	V2A
11.	Spring disk	V2A
12.	Adjustment ring	V2A
13.	Flange (3x)	V4A
14.	Blind flange	V4A
15.	Carrier	V4A
16.	Handle	St
17.	Hand sleeve	PVC, blue
18.	Stop	V2A
19.	6-sided screw	V2A
20.	6-sided screw	V2A

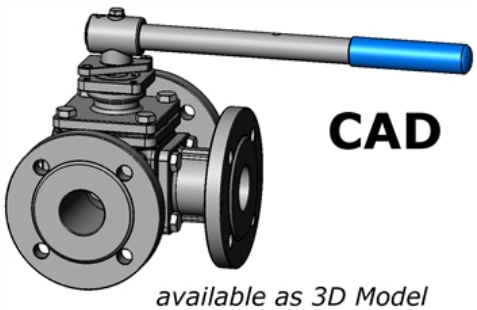

CAD

available as 3D Model

TURN / PORT	0°	90°	180°	270°
L-BALL				
T-BALL				