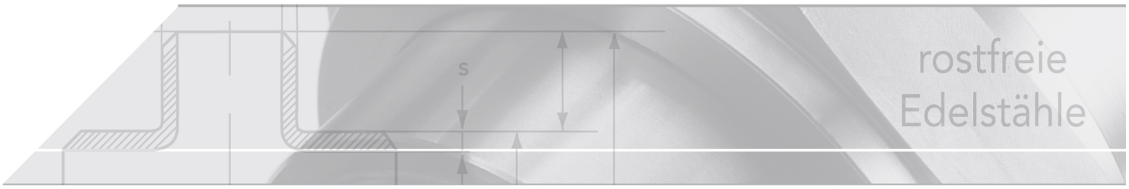

electric actuator

short name: EANT10*

J2 series, model 10

> protection class: IP 65

> 2 volt-free limit switches

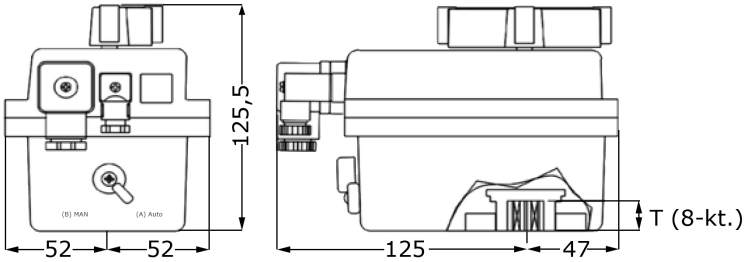

technical product sheet

Volt	8kt.	Art.-Nr.
24V	14 mm	EANT-010-L
85-240V	14 mm	EANT-010-H

available material: ask

Industrial valves › ball valves › with actuator › electric › actuators › 10 Nm

full description:

electric actuator
J2 series, model 10
> protection class: IP 65
> 2 volt-free limit switches
> manual override
> heater
> electric torque limiter
> connection acc. ISO 5211
> multi flange F03/F05
(Please notice the operating manual!)

Series J2 Model 10	Properties
Voltage range L [-0%/+5%]	24V AC/DC
Voltage range H [+/-5%]	110-240V AC/DC
Current consumption	min. 0,2 A - 0,28 A
Running time (s/90°) [+/-10%]	16 s
Heating	3,5 W
Breakaway torque	12 Nm
Working torque	10 Nm
Duty cycle [ED]*	75%
Type of protection	IP 65
Temperature range	-20°C bis +70°C
Connection	DIN 43650, ISO 4400, C-192/C-193
Housing	Polyamid (PA6)
LxWxH	172x125,5x104
with 8-edge consumption	14 mm
Consumption depth	17 mm
Flange pattern	F05/F07

Duty cycle

After each run time of the actuator, a break of 25% of the total running time is necessary to avoid damaging the drive.

Designation	Time	On-drive 0°-90°	On/Off-drive 0°-90°-0°
Running time (75%)	16 s	1	0
Break (25%)	4 s	1	0
Total time (100%)	20 s	1	0
per minute	60 s	3	2
per 10 minutes	600 s	30	15
per hour	3600 s	180	90

-> 3600 s : 20 s = 180 drives

Features:

- ETL: Electronic Torque Limiting
  The electronic torque limiter protects valves and actuators against damage from overloading.

- AVS: Automatic Voltage Sensing
  All voltages are covered automatically and without configuration by two voltage variants.
  The running times and torques remain unchanged in this case.

- ATC: Automatic Temperature Control
  Including switching room heater. If the voltage is not switched off externally, the automatic switching space heater works to prevent the formation of condensed water buildup inside the actuator.

- Unlocked mechanically
  The gearbox is unlocked when the protection circuit of the limiter is activated or when the end position is reached (rotated in reverse) in order to allow an easy transition from the automatic mode to the manual mode. The self-inhibiting property of the actuator is unchanged.

- Low-ear, corrosion-resistant, and high-strength housing made of nylon.

- High stiffness (self-inhibiting)

- Manual override

- Two limit switches for controlling the motor with electronic motor cut-off

- Two limit switches for reporting the position

Wiring

The standard circuit diagram provides a 3-wire circuit for AC and DC.
Alternatively, a 2-wire DC wiring is possible.

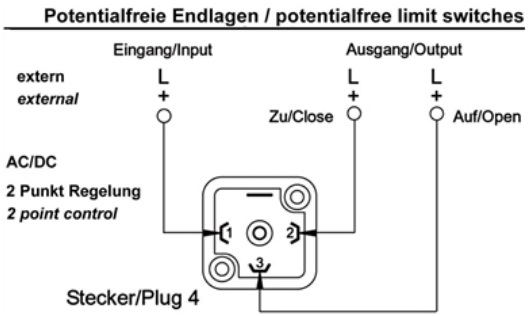
Potentialfreie Endlagen / potentialfree limit switches
Eingang/Input
Ausgang/Output
extern
external
L
+
L
+
L
+
Zu/Close
Auf/Open
AC/DC
2 Punkt Regelung
2 point control
1
2
3
Stecker/Plug 4

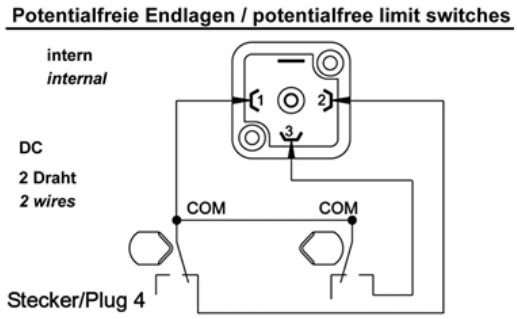
Potentialfreie Endlagen / potentialfree limit switches
intern
internal
DC
2 Draht
2 wires
COM
COM
1
2
3
Stecker/Plug 4

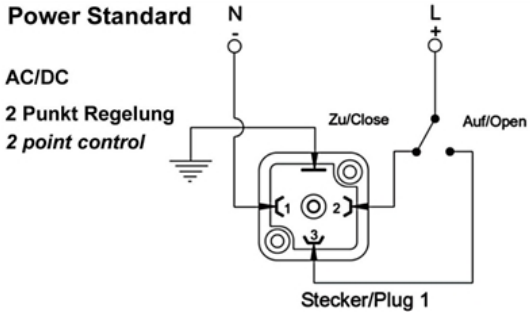
Power Standard
N
-
L
+
AC/DC
2 Punkt Regelung
2 point control
Zu/Close
Auf/Open
1
2
3
Stecker/Plug 1

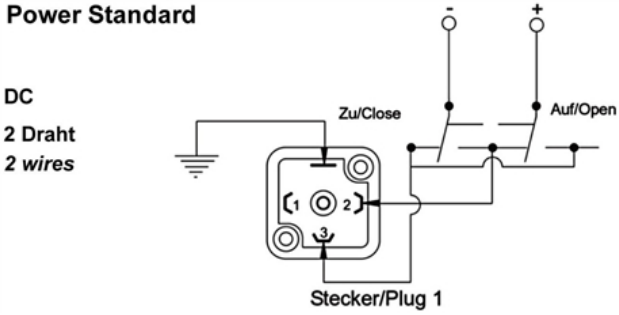
Power Standard
-
+
DC
2 Draht
2 wires
Zu/Close
Auf/Open
1
2
3
Stecker/Plug 1

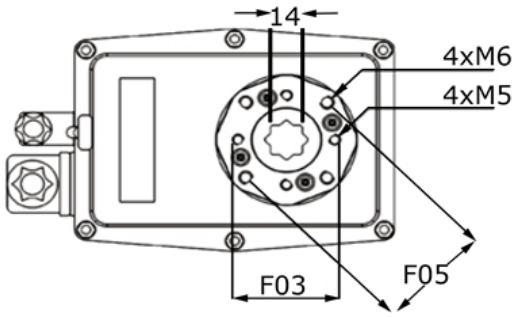
14
4xM6
4xM5
F03
F05