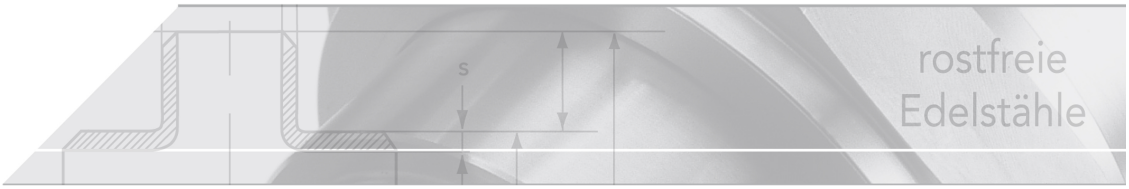

2-piece gas ball valve DVGW

short name: DVGW.K2.G*

female thread, full bore

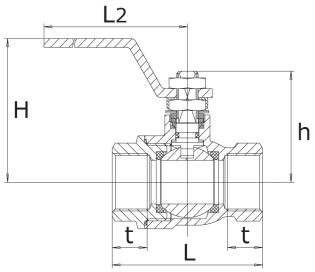

technical product sheet

DVGW	DN	Rp	t	L	H	h	L2	Kv	kg
MOP 5	8	1/4"	11,4	55	52,0	37,0	110	11	0,220
MOP 5	10	3/8"	11,4	55	52,0	37,0	110	11	0,205
MOP 5	15	1/2"	14,5	65	55,0	42,0	110	20	0,275
MOP 5	20	3/4"	16,3	70	66,0	52,0	140	60	0,465
MOP 5	25	1"	19,1	85	70,0	56,0	140	100	0,710
MOP 5	32	1 1/4"	21,4	95	85,0	68,0	167	130	1,180
MOP 5	40	1 1/2"	23,5	105	91,0	74,0	188	170	1,740
MOP 5	50	2"	25,7	125	105,0	87,0	188	280	2,930

available material: V4A

Industrial valves › ball valves › threaded ends › 2-piece, full bore › DVGW › stainless steel › approval for gases › max. 5 bar

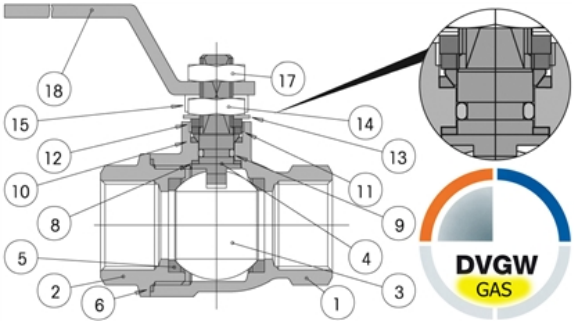

Parts list

Pos.	Description	Material
1.	Housing	Stainless steel 1.4408
2.	Connection End	Stainless steel 1.4408
3.	Ball	Stainless steel 1.4401
4.	Stem	Stainless steel 1.4401
5.	Ball seals	PTFE
6.	Housing seal	PTFE
8.	Stem washer	PTFE
9.	O-ring	FKM
10.	Stem seal	PTFE
11.	Stem packing nut	Stainless steel 1.4301
12.	Stop	Stainless steel 1.4301
13.	Belleville washer	Stainless steel 1.4310
14.	Stem nut	Stainless steel 1.4301
15.	Tab washer	Stainless steel 1.4301
17.	Nut	Stainless steel 1.4301
18.	Handle	Stainless steel 1.4301
18a.	Coating	PVC (yellow, alternative black)

Technical Data

Type Alba	Version
Certification	DVGW MOP 5 for gas to 2"
Pressure range	PN 5 when used as gas isolation valve
Temperature range	-20°C / +150°C
Spindel	blow-off proof
Stem seal	patented 3 times, conical upper seal
Connections	F/F UNI-ISO 7/1 Rp DIN 2999

Breakaway torques [Nm]

Size	0 bar	16 bar	40 bar	64 bar	100 bar
1/4"	1,6	1,8	2,5	3,2	3,8
3/8"	1,6	1,8	2,5	3,2	3,8
1/2"	3,2	4,3	5,1	5,6	6,5
3/4"	3,6	4,9	6,0	6,8	
1"	4,6	5,9	6,9	8,0	
1 1/4"	11,5	15,0	16,7		
1 1/2"	19,0	24,0	28,6		
2"	27,5	38,0	42,0		