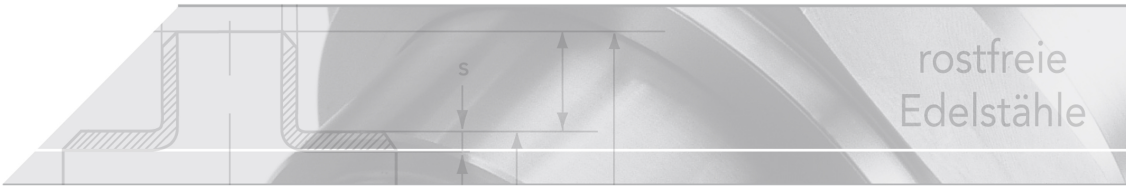

insert part, conical - M

short name: R134UE*

fits for union R-134

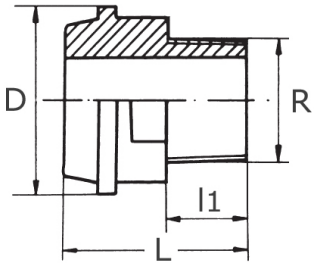

technical product sheet

R	D	L	l1	Mutter	PN	Art.-Nr.
1/4"	22	29	12	passend zu M24x1,5	64	VKEA-014R134
3/8"	25	30	13	passend zu M27x1,5	64	VKEA-038R134
1/2"	30	36	17	passend zu M32x1,5	64	VKEA-012R134
3/4"	36	37	18	passend zu M38x1,5	64	VKEA-034R134
1"	43	42	21	passend zu M45x1,5	64	VKEA-100R134
1 1/4"	54	48	24	passend zu M56x1,5	40	VKEA-114R134
1 1/2"	60	48	24	passend zu M62x1,5	40	VKEA-112R134
2"	74	55	29	passend zu M76x1,5	40	VKEA-200R134

available material: ask

Threaded fittings › unions › conical seat › PN 50/ 100 › kit / individual parts › series R-134 (PN 40) › kit › R-134 UE

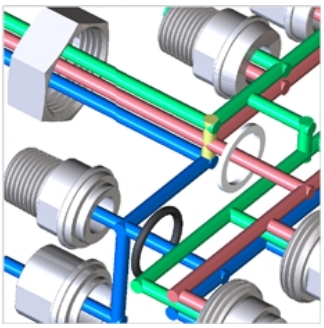

Modular system

series R-134
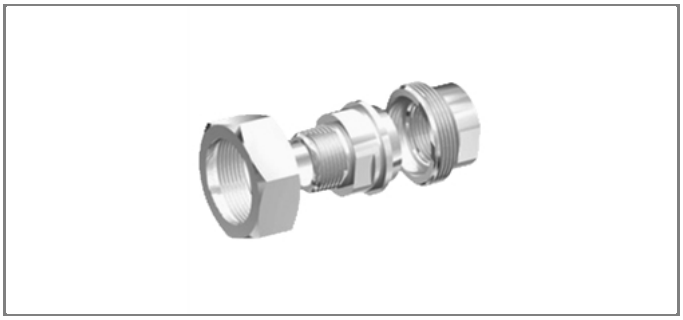
> all individual parts can be exchanged with each other or combined
> by installing the seal, a cone sealing coupling becomes a flat sealing coupling
> manufactured from solid material – „threaded version“
> pressure level PN 40
> material 1.4404/ AISI 316L
> BSP-thread according to ISO 228/1; optional with NPT thread