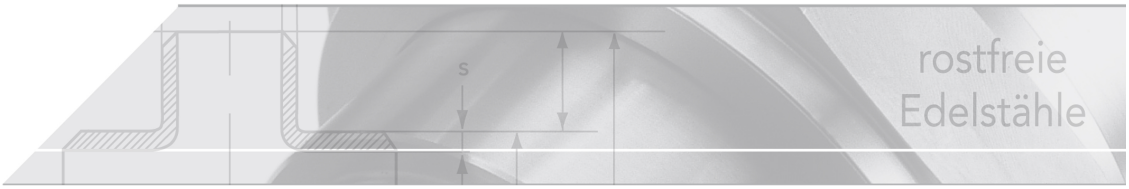

Aseptic-flange connection

DIN 11864-2, design A

short name: ASEP.FV*

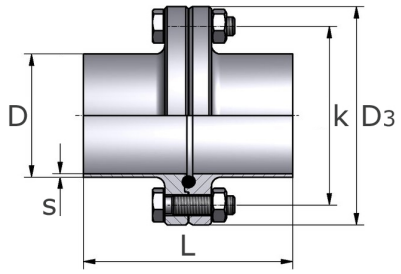

technical product sheet

Anschl.	DN	D	s	D3	L	k	Schraube	DW	kg
DIN	10	13,0	1,5	54	80	37	4x M8 x 30	EPDM	0,330
DIN	15	19,0	1,5	59	80	42	4x M8 x 30	EPDM	0,390
DIN	20	23,0	1,5	64	80	47	4x M8 x 30	EPDM	0,450
DIN	25	29,0	1,5	70	80	53	4x M8 x 30	EPDM	0,530
DIN	32	35,0	1,5	76	90	59	4x M8 x 30	EPDM	0,620
DIN	40	41,0	1,5	82	90	65	4x M8 x 30	EPDM	0,700
DIN	50	53,0	1,5	94	90	77	4x M8 x 30	EPDM	0,933
DIN	65	70,0	2,0	113	108	95	8x M8 x 30	EPDM	1,175
DIN	80	85,0	2,0	133	116	112	8x M10 x 35	EPDM	1,914
DIN	100	104,0	2,0	159	116	137	8x M10 x 40	EPDM	3,277
DIN	125	129,0	2,0	183	120	161	8x M10 x 40	EPDM	3,531
DIN	150	154,0	2,0	213	120	188	8x M12 x 50	EPDM	4,820
ISO	10	17,2	1,6	59	80	42	4x M8 x 30	EPDM	0,330
ISO	15	21,3	1,6	62	80	45	4x M8 x 30	EPDM	0,390
ISO	20	26,9	1,6	69	80	52	4x M8 x 30	EPDM	0,530
ISO	25	33,7	2,0	74	90	57	4x M8 x 30	EPDM	0,630
ISO	32	42,4	2,0	82	90	65	4x M8 x 30	EPDM	0,740
ISO	40	48,3	2,0	88	90	71	4x M8 x 30	EPDM	0,820
ISO	50	60,3	2,0	103	108	85	4x M8 x 30	EPDM	1,120
ISO	65	76,1	2,0	125	112	104	8x M10 x 30	EPDM	1,660
ISO	80	88,9	2,3	137	120	137	8x M10 x 35	EPDM	2,010
ISO	100	114,3	2,3	168	120	146	8x M10 x 35	EPDM	3,250

available material: 1.4404

Systems › DIN 11864/ DIN 11853 › flange connections › Aseptic DIN 11864-2 › complete connections

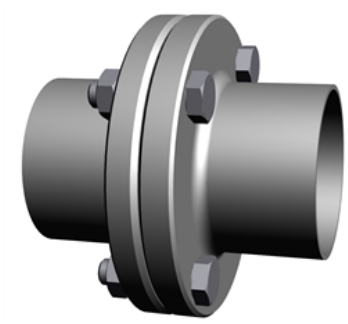

Aseptic-flange connection DIN 11864-2, Shape A

> Fields of application

The aseptic and hygiene flange connections according to DIN 11853-2 are compatible and differ only in terms of the axial length. They are used for processing systems for liquid media with high purity requirements. Popular areas of application are the biotechnology, cosmetics, chemical, pharmaceutical, and food and beverage industries.

> Installation

The O-ring is inserted in the groove flange during installation, which automatically holds the O-ring in place. The collar flange is then placed against it so that both flanges engage each other.
The flanges and the O-ring are therefore coaxially centered. After that, the screws are inserted through the holes drilled in the flanges so that the heads of the screws are on the outer surface of one flange and the threads of the screws stick out of the other flange. The nuts are screwed onto these threads andevenly tightened until the faces of the flanges come into contact with each other. The O-ring is deformed by this so that a smooth passage free of dead space and a sealed connection are produced.

> Operating pressure (at 140°C)

Tube-OØ	bar
till 41 mm	max. 25 bar
42,4 - 101,6 mm	max. 16 bar
104,0 - 154,0 m	max. 10 bar
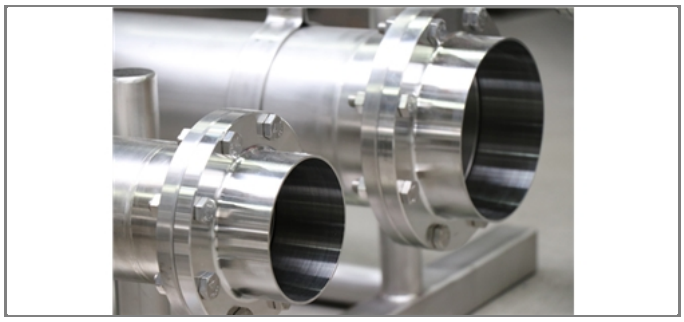
when suitable seals are used